KEYSTONE BREWSEAL BUTTERFLY VALVES

WAFER AND LUGGED

Resilient seated butterfly valves DN 40 - 300 wafer and lugged versions, optimized for the food and beverage industry

FEATURES

- Top bushing absorbs actuator side thrust loads.
- Dirtscraper prevents moisture penetrating into the shaft area.
- Actuator flange acc. ISO 5211.
- High solid, glossy, silicone free, paint system ensuring excellent corrosion resistance.
- Body locating holes ease installation and centering between the flanges.
- Sealed body splits prevent moistures from penetrating behind the seat.
- Rounded polished disc edge gives full concentric sealing, lower torques, longer seat life and bubble-tight shut-off.
- The seat is field replaceable and fully isolates the body and stem from the flow.
- Primary stem sealing exceeds the pressure rating of the valve and prevents leakage through shaft area to atmosphere.
- A secondary shaft sealing provides back-up safety.
- A molded-in O-ring in the seat for flange sealing eliminates the need for gaskets.
- The thin disc provides the very minimum obstruction to flow.
- Relief hole drains possible fluids from the top plate recess space.
- Wafer and lugged body design, acc. ISO 5752/5 short (DIN 3202, Part 3/K1).
- All valves are conform Pressure Equipment Directive (97/23/EU) Module H.
- Available approvals: CE Marking, FDA.
- Special XP-EPDM seat for specific brewery applications such as hot and cold wort.

GENERAL APPLICATIONS

The disc and seat materials used in the BrewSeal are specifically suited for food and beverage applications including brew houses, pasteurization and filling areas.

NOTE

Valve in foreground shown with innovative composite handle and throttling plate.

TECHNICAL DATA

Pressure (bar):	10
Temperature (°C):	-30 +150
Sizes (DN):	40 - 300
Flange accommodation:	PN 10/16 ASME 150

© 2017 Emerson. All Rights Reserved.

KEYSTONE BREWSEAL BUTTERFLY VALVES

WAFER AND LUGGED

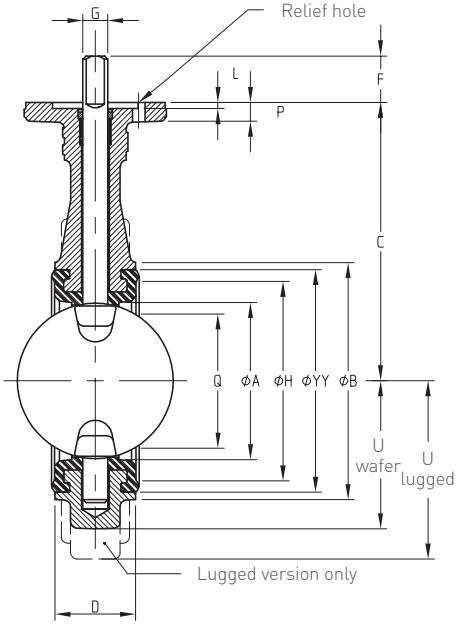

MOUNTING HOLES ACC. ISO 5211/1

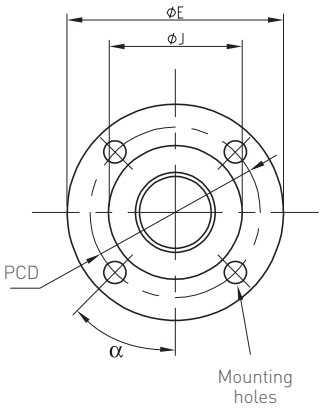

VALVE DIMENSIONS (mm)

											Shaft		Actuator flange acc. ISO 5211/1									
DN	A	B	C	U Wafer	U Lugged	D	H	Q	YY	F	G_{h9}	$K°_{-0.05}$	Type	E	J	L	P	PCD	Hole ø	No. holes	∝	Wafer mass (kg)	Lugged mass (kg)
40	40	78	130	56	68	33	49	24	64	25	12	8	F-05	65	35	4	9	50	6.6	4	45.0	1.5	2.7
50	50	94	135	61	73	43	66	27	80	25	12	8	F-05	65	35	4	9	50	6.6	4	45.0	2.1	3.7
65	62	109	150	76	80	46	78	43	93	30	16	11	F-07	90	55	4	12	70	9.0	4	45.0	3.2	5.0
80	78	126	160	84	103	46	97	64	112	30	16	11	F-07	90	55	4	12	70	9.0	4	45.0	3.6	5.9
100	99	156	180	97	117	52	129	87	144	30	16	11	F-07	90	55	4	12	70	9.0	4	45.0	5.2	8.3
125	124	189	195	120	133	56	160	113	175	30	20	14	F-07	90	55	4	12	70	9.0	4	45.0	7.6	11.5
150	151	214	210	132	144	56	181	141	196	30	20	14	F-07	90	55	4	12	70	9.0	4	45.0	8.5	13.0
200	195	267	240	164	180	60	233	188	248	50	25	18	F-12	150	85	4	18	125	13.5	4	45.0	16.0	22.2
250	245	321	275	200	220	68	290	237	305	50	30	22	F-12	150	85	4	18	125	13.5	4	45.0	23.5	33.5
300	292	375	310	227	245	78	340	283	355	50	30	22	F-12	150	85	4	18	125	13.5	4	45.0	32.0	51.0

NOTES

1. Flange accommodation must be specified when ordering.
2. Q is the disc chordal dimension at face of valve for disc clearance into pipe fitting or equipment.
3. Specify size, figure number, part name, material and flange accommodation when ordering spare parts.
4. Valve sizes shown are the DN 100.
5. Mass shown is for valve with a composite disc stem about 3% up to 20% lower, depending on size and wafer or lugged type.

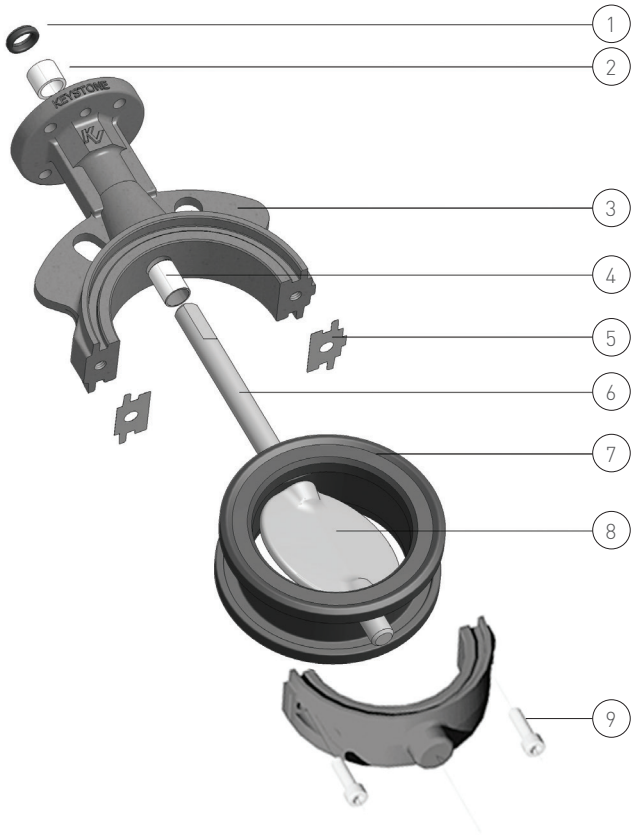

DN 40 - 300
(WAFER VERSION IS SHOWN)

ACTUATOR SELECTION

Actuator type	Figure	Remark	Suitable for
Handle	F419	Leverlock	
		Composite leverlock	DN 40 - 150
Gear	F455	CM or WM	DN 40 - 300
Pneumatic	PremiAir	-	DN 40 - 300
Electric	EPI-2	-	DN 40 - 300

NOTE
For other actuators and selection, please contact your local sales outlet.

PARTS LIST

Part	Name
1.	Dirtscraper
2.	Shaft bushing
3.	Body
4.	Shaft
5.	Seat
6.	Disc
7.	Split seal
8.	Body screws
9.	Disc screw

K_V VALUES

	DN								
Disc opening	**40**	**50**	**65**	**80**	**100**	**125**	**150**	**200**	**250**
10°	-	-	-	-	-	-	-	-	19.5
20°	0.6	0.9	2.4	5.0	9.2	14.8	22.4	53	151
30°	3.8	5.9	11.1	20.4	37.6	66.8	108	204	300
40°	9.2	14.3	26.2	47.4	84.8	143	221	392	572
50°	18.1	28.3	49.7	87.9	154	254	381	657	956
60°	33.5	51.6	87.4	151	260	420	621	1.050	1.540
70°	54.2	88.6	156	274	471	743	1.062	1.731	2.628
80°	57.6	111	232	442	789	1.261	1.802	2.946	4.616
90°	58.5	112	249	492	895	1.444	2.099	3.715	6.883

NOTES

1. Rated K_v = the volume of water in m^3/hr that will pass through a given valve opening at a pressure drop of 1 bar.
2. $K_v = Q\sqrt{\frac{R.D.}{\Delta p}}$ (liquid)

   Q = flow through valve (m^3/hr)

   R.D. = relative density of liquid (water = 1)

DYNAMIC TORQUE FACTOR F_T FOR METRIC UNITS

	DN									
Disc opening	**40**	**50**	**65**	**80**	**100**	**125**	**150**	**200**	**250**	**300**
10°	-	-	-	-	-	-	-	-	-	-
20°	0.1	0.1	0.2	0.5	0.9	1.8	3.0	7.2	14.1	24.3
30°	0.1	0.3	0.6	1.1	2.1	4.1	7.1	16.8	32.8	56.7
40°	0.3	0.5	1.1	2.1	4.1	8.0	13.8	32.8	64.1	110.7
50°	0.4	0.9	1.9	3.6	7.0	13.7	23.6	56.0	109.4	189.0
60°	0.8	1.5	3.3	6.1	12.0	23.4	40.5	96.0	187.5	324.0
70°	1.3	2.5	5.5	10.2	20.0	39.1	67.5	160.0	312.5	540.0
80°	2.0	3.9	8.5	15.9	31.0	60.5	104.6	248.0	484.4	837.0
90°	-	-	-	-	-	-	-	-	-	-

NOTES

1. Dynamic operating torque formula:

   $T_D = F_T \times \Delta P$

   T_D = Dynamic torque (Nm)

   ΔP = Pressure drop across disc at desired disc-opening (bar)

   F_T = Dynamic torque factor (see table)
2. The above mentioned dynamic torque includes all frictional resistances.
3. The dynamic torque is tending to close the disc.
4. ΔP to be determined with K_v formula.

MAXIMUM ALLOWABLE SHAFT TORQUES IN Nm

	DN									
W. Nr.	**40**	**50**	**65**	**80**	**100**	**125**	**150**	**200**	**250**	**300**
1.4408	32	32	80	80	80	160	160	327	580	580
1.4057 *	65	65	110	160	160	320	320	935	1660	1660

* for Composite disc

NOTES

1. In ISO 5211/2 a table is listed representing the maximum torques which can be transmitted through the actuator flange. These values are based upon specific criteria and can be lower than the maximum allowable shaft torques. In this case the criteria can be changed in order to reach the maximum allowable shaft torques.

SIZING TORQUES IN Nm

	DN									
ΔP in bar	**40**	**50**	**65**	**80**	**100**	**125**	**150**	**200**	**250**	**300**
I*										
3,5	10	13	19	26	37	58	81	148	241	345
7	10	13	20	27	40	63	88	164	271	387
10	11	14	21	30	44	70	99	188	315	451
II*										
3,5	11	14	21	29	42	66	93	169	274	392
7	11	14	22	31	45	71	100	185	303	434
10	11	15	23	33	49	78	111	208	347	498
III*										
3,5	12	15	23	32	48	74	105	190	306	439
7	12	16	24	34	50	79	112	206	336	481
10	12	16	26	36	54	86	122	229	380	545

* Application I, II, III

NOTES

1. **Application I** : Water.
   Temp.: 0-80 °C; Valve opens at least once a month.
   Application II : All other liquid applications and lubricating gasses.
   Application III : Non-lubricating and dry media.
2. The charted maximum sizing operating torque is the sum of all friction and resistance for opening and closing of the disc against the indicated pressure differential.
3. The effect of dynamic torque is not considered in tabulation.
4. In sizing operators it is not necessary to include safety-factors.

* For limited shaft material selection only.

MATERIAL SPECIFICATION

Part name	Material	EN designation	EN/DIN Mat. no.	Remarks
Body	Ductile iron	GJS-400-15	EN GJS 400 15	Pressure 10 bar
	Stainless steel	GX5CrNiMo19-11-2	1.4408	Comparable with CF8M
Disc	Stainless steel	GX5CrNiMo19-11-2	1.4408	Comparable with CF8M
	Stainless steel mirror polished	GX5CrNiMo19-11-2	1.4408	Comparable with CF8M
	Composite			Engineered Composite DN 40 - 300
Shaft	Stainless steel (cast)	GX5CrNiMo19-11-2	1.4408	DN 40 - 300
	Stainless steel	X 17 CrNi 16-2	1.4057	DN 40 - 300
Seat	XP EPDM			FDA approved
	PTFE/EPDM			Upon request
Body screw	Stainless steel			A2
Bushing	Polyacetal			
Dirt scraper	NBR/steel			
Split seal	Graphite			

NOTE

Please refer to the OptiSeal documentation for safety, installation and maintenance instructions.

PRESSURE-TEMPERATURE DIAGRAM

Seat material	Disc material	Body material	Size range DN (mm)	Valve function Wafer/End of Line	Temperature in °C -40 -30 -20 -15 0 50 100 120 130 150 160
XP EPDM	Stainless steel	DI	40 - 250	W / EOL	**10 Bar / 6 Bar**
	Stainless steel MP	DI	40 - 250	W / EOL	**10 Bar / 6 Bar**
	Stainless steel	SS	50 - 300	W / EOL	**10 Bar / 6 Bar**
	Stainless steel MP	SS	50 - 300	W / EOL	**10 Bar / 6 Bar**
	Composite	DI	40 - 300	W / EOL	**10 Bar / 6 Bar**

* DN 300 6 Bar / 6 Bar
MP = mirror polished

TRIM

Body	Seat	Disc	Shaft	Remarks
Ductile iron	XP-EPDM	Stainless steel (cast)	Stainless steel (cast)	DN 40 - 300
		Stainless steel MP (cast)	Stainless steel (cast)	DN 40 - 300
		Composite	Stainless steel	DN 40 - 300
Stainless steel	XP-EPDM	Stainless steel (cast)	Stainless steel (cast)	DN 50 - 300
		Stainless steel MP (cast)	Stainless steel (cast)	DN 50 - 300

MP = mirror polished

VCTDS-00774-EN © 2017, 2024 Emerson Electric Co. All rights reserved 06/24. Keystone is a mark owned by one of the companies of Emerson Electric Co. The Emerson logo is a trademark and service mark of Emerson Electric Co. All other marks are the property of their prospective owners.

The contents of this publication are presented for informational purposes only, and while every effort has been made to ensure their accuracy, they are not to be construed as warranties or guarantees, express or implied, regarding the products or services described herein or their use or applicability. All sales are governed by our terms and conditions, which are available upon request. We reserve the right to modify or improve the designs or specifications of such products at any time without notice.

Emerson Electric Co. does not assume responsibility for the selection, use or maintenance of any product. Responsibility for proper selection, use and maintenance of any Emerson Electric Co. product remains solely with the purchaser.

Emerson.com