KEYSTONE K-LOK® HIGH PERFORMANCE BUTTERFLY VALVES

SERIES 36 AND 37 - ISO

K-LOK® Series 36 - PN 10/16 / ASME 150
K-LOK® Series 36 - DN 50 EN 558 Series 20 FTF, DN 65 to 125 PN 10/16/20/25 / ASME 150
K-LOK® Series 37 - PN 25/40 / ASME 300
K-LOK® Series 37 - DN 50 EN 558 Series 20 FTF, DN 65 to 125 PN 40 / ASME 300

GENERAL APPLICATIONS

- Modulating service
- Airport refueling
- Hydrocarbon processing
- Chemical/petrochemical processing
- Purified gas
- Steam and vacuum services
- Power and utilities
- Refrigeration
- HVAC
- Alumina refining

TECHNICAL DATA

Size range:	DN 50 to 300
Vacuum rating:	1.354 x 10^{-3} mbar / 1.016 x 10^{-3} mm Hg
Body style:	Wafer, lug
Pressure rating:	Series 36 DN 50 to 300: PN 10/16/ASME 150 DN 50 EN 558 Series 20 FTF, DN 65 to 125: PN 10/16/25 / ASME 150 Series 37 DN 50 to 300: PN 25/40 / ASME 300 DN 50 EN 558 Series 20 FTF, DN 65 to 125: PN 40 / ASME 300
Temperature rating:	-40 to +260°C
Testing standard:	EN 12266

Lug style valves are full rated for bidirectional dead end service as standard.

FEATURES AND BENEFITS

- K-LOK® polymer seats provide bi-directional, drop-tight shut-off in vacuum as well as at full rated differential pressure. Its unique design does not rely on pressure to assist sealing therefore seals at high and low pressures, as well as dirty services. A variety of materials allows optimum seat life in all applications.
- Blow-out resistant shaft is standard on all valves for increased safety.
- Unique packing design allows for use in pressure as well as vacuum without modification or special assembly.
- Disc taper pins are tangentially positioned half in disc and half in shaft, placing them in compression rather than shear, which eliminates potential for failure.
- Unique gland bridge design compensates for uneven adjustment of gland nuts, reducing packing leaks and maintenance costs.
- Integrally cast disc position stop perfectly locates the disc in seat, achieving maximum seat and seal life.
- Extended neck allows for 50 mm of pipeline insulation.
- Flattened body bore at shaft journal ports positions shaft bearings near disc, providing maximum shaft support resulting in reduced wear and longer life.
- ISO 5211 actuator mounting.
- All valves comply with Pressure Equipment Directive (PED) CE marking and UKCA marking.
- All valves certified to EN 15848-1 fugitive emissions.

© 2026 Emerson. All Rights Reserved.

PRINCIPLES OF OPERATION

Double offset disc/shaft

K-LOK®'s unique two-piece shaft and double-offset disc/shaft design allows for high cycling and creates a lower disc profile with increased capacity and a rangeability of 33:1.
In addition to increasing the flow area across the disc, this design minimizes wear points between seat and disc.
The first offset is achieved by locating the shafts downstream of the center-line of the seat. This allows for a totally unobstructed 360° sealing surface.
The second offset locates the shafts off-center of the vertical axis of the seat.
The combination of these two offsets creates a camming effect as the disc swings into and out of the seat. The disc lifts quickly out of the seat in the first few degrees of travel and does not contact the seat again until it is nearly closed. There are no wear points between the seat and disc, while operating torques are reduced and seat life is extended.

Adjustable shaft packing

The K-LOK®'s unique shaft packing is composed of 3 rings of braided PTFE rope between one PTFE V-ring at the top and bottom. The packing operates on an interference fit with the body and therefore will seal in pressure and vacuum. Many other manufacturers' designs will require special packing for vacuum services.
This packing is easily field adjustable without the need to remove actuation due to its unique inverted packing adjustment bolts. Another important feature is the use of a packing gland bridge which has been designed with a spherical radius for 360 degree contact with the radius on the packing gland, which allows for even compression on the packing, even with uneven tightening of the adjustment bolts.

Blow-out resistant shaft (BOR)

The Keystone K-LOK® high performance butterfly valve contains a blow-out resistant shaft as a standard. This is achieved by machining a groove in the shaft that allows a snap ring to lock into the shaft groove.
The packing gland follower is provided with an undercut on its lower surface which encapsulates the locked in snap ring.
This design provides positive retention of the shaft in the unlikely event of a shaft breakage.

Live loaded packing

The EN 15848 fugitive emissions version of the Keystone K-LOK® comes standard with live loaded packing.

Two-piece shaft vs. one-piece shaft

K-LOK®'s disc geometry maximizes flow capacity by increasing the available flow area through the valve. This increase in disc efficiency results in a higher valve C_v.

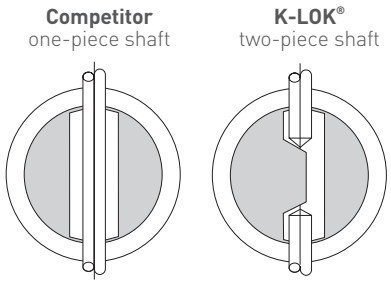

Aspect ratio = open area ÷ disc area

Standards and specifications applicable for K-LOK®		
ASME	B16.34	Steel valves
	B31.3	Chemical plant and petroleum refinery piping
	B16.5	Steel pipe flanges and flange fittings
MSS	SP-25	Standard marking systems for valves
	SP-55	Quality standard for steel casting
	SP-61	Pressure testing of steel valves
	SP-68	High pressure offset disc butterfly valves
API	609	Butterfly valves
	598	Valve inspection and test, upon request
PED		European Directive CE & UK Pressure Equipment Safety Regulations UKCA
EN	558	Face-to-face dimensions
	1092-1	Flange drillings
	15848-1	Fugitive emissions
	12266-1	Testing of metallic valves

DOUBLE OFFSET

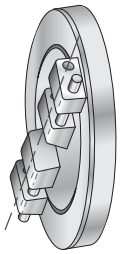

FIRST OFFSET

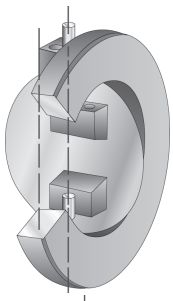

SECOND OFFSET

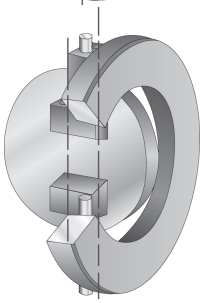

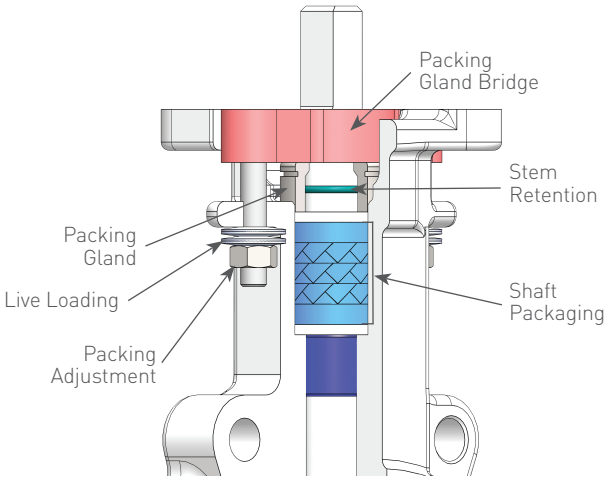

SEAT DESIGN

The K-LOK® seat is a true interference seat design and unlike most other manufactures does not rely on line pressure to assist in sealing. All seats seal drop-tight bidirectionally at low and high pressure as well as vacuum. Given the interference seat design the K-LOK® will also operate in dirty services where most pressure assist valves fail.
Polymer (PTFE and RTFE) seats incorporate a unique design consisting of a stainless steel braided wire winding, enclosed in a U-shape envelope to provide seating energy and memory. This wire winding allows axial flexibility in both directions of flow. The winding also allows radial flexibility when the disc is not fully closed, reducing seat/disc interference, seat wear and shaft torque. When the disc closes, it provides circumferential stiffness and assures the required disc/seat seals tight in both vacuum and pressure.

SEAT REPLACEMENT

All seats for the Keystone K-LOK® are easily field replaceable. Simply remove seat retainer ring, rotate disc to fully closed position and replace seat assembly and gasket. Disassembly of the disc and shaft is not required.

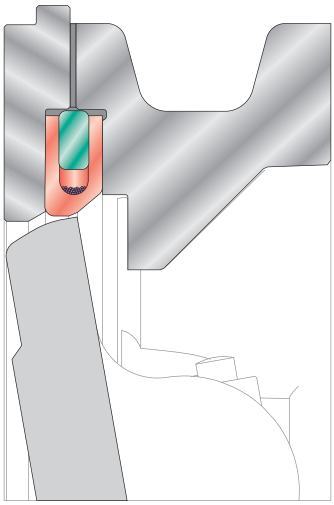

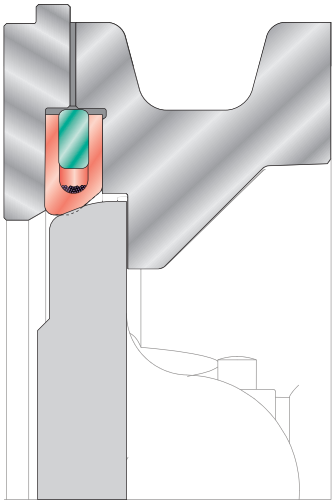

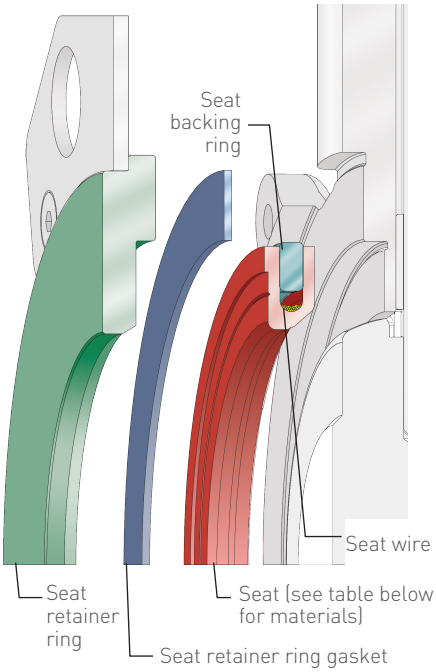

SEAT MATERIALS

Seat	Material	Typical applications
1. RTFE	Reinforced polytetrafluoroethylene	HVAC, steam, chlorine, ammonia, nitrogen, water, gasoline, vacuum
2. PTFE	Polytetrafluoroethylene	Pharmaceuticals, air, potable water, dyes, white mediums
For seats 1 thru 2		
Wire wrap	Stainless steel braided wire	
Seat backing ring	Stainless steel	Steam, ammonia, elevated temperature services

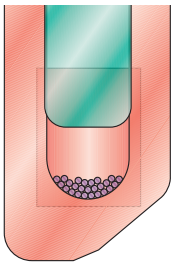

STANDARD MATERIALS OF CONSTRUCTION

Pos	Description	Material	Material standard
1	Body	Carbon steel	ASTM A216-WCB/ EN 10213 GP240H/ 1.0619
		Stainless steel	ASTM A351-CF8M/ EN 10213 Gx5CrNiMO 19-11-7/ 1.4408
2	Disc	316 SS	ASTM A351-CF8M/ EN 10213 Gx5CrNiMO 19-11-7/ 1.4408
		Super duplex [1]	ASTM A995 Gr. CE3MN
3	Upper stem	17-4PH SS	ASTM A564- Condition H1075 or H1100
4	Lower stem	17-4PH SS	ASTM A564- Condition H1075 or H1100
5	Taper pin	17-4PH SS	ASTM A564- Condition H1075 or H1100
6	Spacer	316 SS	
7	Thrust washer	316 SS/BRZ/PTFE	
8	Bearing	316 SS/BRZ/PTFE	
		316 SS/PTFE	Food grade
		RTFE/Composite	
9	Anti-extrusion ring	316 SS	
10	Stem packing	PTFE	
11	Ring, stem retention	316 SS	
12	Gland	17-4PH SS	
13	Gland bridge	17-4PH SS	
14	Stud	B8 CL2	
15	Belleville washer	50 CrV4	
16	Hex nut	Stainless steel 18.8	
17	Bottom spiral wound gasket	AISI 316+graphite	
18	Bottom cover	Carbon steel	ASTM A515/516 Gr.70-WCB
		Stainless steel	ASTM A240
19	Washer, ext. tooth lock	Stainless steel 18.8	
20	Screw, HEX HD cap	B8 CL2	
21	Seat assembly		
21.1	Seat	Polymer	PTFE, RTFE
21.2	Wire structure	Stainless steel	
21.3	Seat backing ring	Stainless steel	
22	Gasket seat retaining ring	Graphite	
23	Seat retaining ring	Carbon steel	ASTM A515/516 Gr.70-WCB
		Stainless steel	ASTM A240
24	Screw, socket HD cap	Stainless steel	
25	Key	Carbon steel	
26	Coupling (adaptor)	17-4PH SS	
27	Indicator pin	Rubber	Black color
28	Bracket	Carbon steel	Protection level C2 per ISO 2081
29	Washer, split lock	Stainless steel	
30	Hex head bolt	Stainless steel	
31	Plain washer	Stainless steel	
32	Set screw	Stainless steel	
33	Retainer plate	Stainless steel	
		Carbon steel/zinc plated	
34	Retainer plate/clip screw	Stainless steel 18.8	
35	Clip	Stainless steel	

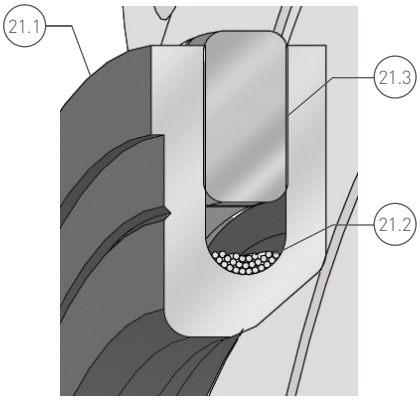

Lug style

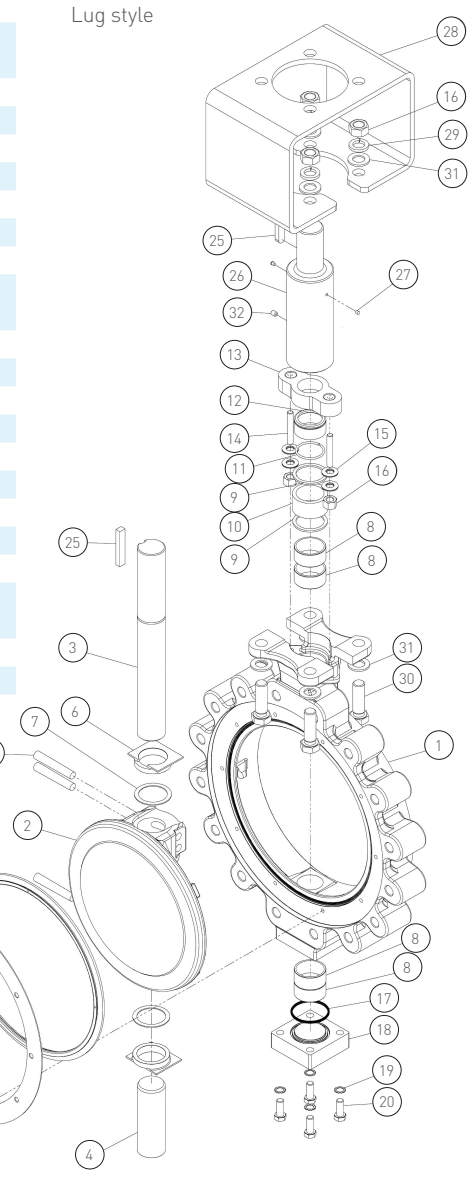

NOTES

1. Super duplex disc is standard on DN 50 with EN 558 Series 20 FTF.
2. All fasteners are SS (B8M CL2/B8 CL2/ Gr.8 PED/ISO 3506-1 A4-80).

Wafer style

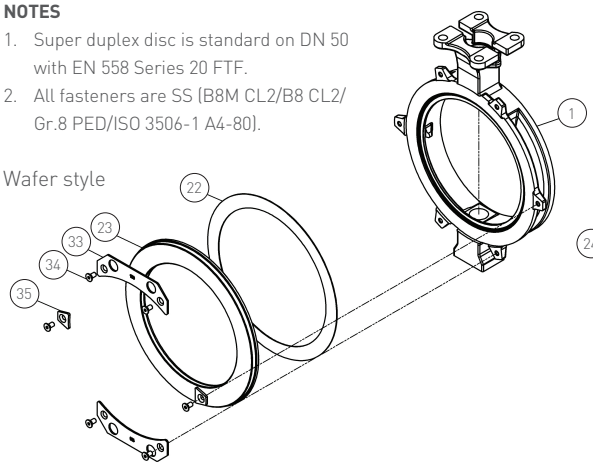

DIMENSIONS - WAFER STYLE

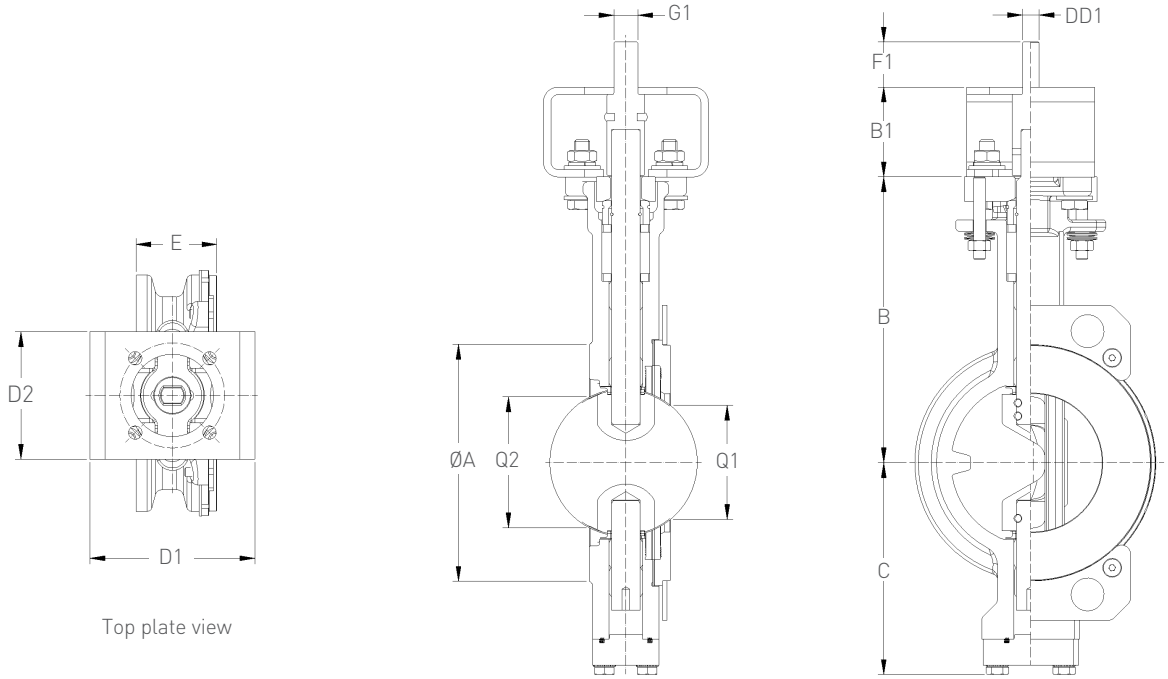

SERIES 36, PN 10/16, WAFER STYLE, DIMENSIONS mm

Size									Shaft Dimensions		Top Plate Data						Mass
DN	A	B	B1	C	E	F1	Q1	Q2	G1	DD1 or keyway	ISO flange type	PCD	No. holes	Hole dia.	D1	D2	kg
50	110	152	60	108	60	30	30	43	12	8	F07	70	4	9	110	85	6
65	105	152	60	121	46	30	51	54	12	8	F07	70	4	9	110	85	6
80	127	168	60	129	46	30	53	64	16	11	F07	70	4	9	110	85	7
100	157	191	60	141	52	30	82	90	16	11	F07	70	4	9	110	85	10
125	186	192	60	154	56	30	111	120	20	14	F07	70	4	9	110	85	13
150	216	222	80	186	56	50	135	140	25	18	F12	125	4	13.5	160	125	17
200	270	257	80	217	60	50	181	187	30	22	F12	125	4	13.5	160	125	26
250	324	289	100	257	68	50	233	237	30	22	F12	125	4	13.5	160	125	39
300	381	330	100	298	78	50	278	284	30	22	F12	125	4	13.5	200	160	61

SERIES 36, PN 10/16/20/25 / ASME CLASS 150, WAFER STYLE, MULTI-DRILLED VERSION DIMENSIONS mm

Size									Shaft Dimensions		Top Plate Data						Mass
DN	A	B	B1	C	E	F1	Q1	Q2	G1	DD1 or keyway	ISO flange type	PCD	No. holes	Hole dia.	D1	D2	kg
50 [1]	104	165	60	113	44	30	14	42	12	8	F07	70	4	9	110	85	6
65	105	152	60	121	46.4	30	51	54	12	8	F07	70	4	9	110	85	6
80	127	168	60	129	46.4	30	53	64	16	11	F07	70	4	9	110	85	7
100	157	191	60	141	52.4	30	82	90	16	11	F07	70	4	9	110	85	10
125	186	192	60	154	56	30	111	120	20	14	F07	70	4	9	110	85	12

NOTE

1. Dimensions are for the DN 50 with EN 558 Series 20 face-to-face.

DIMENSIONS - WAFER STYLE

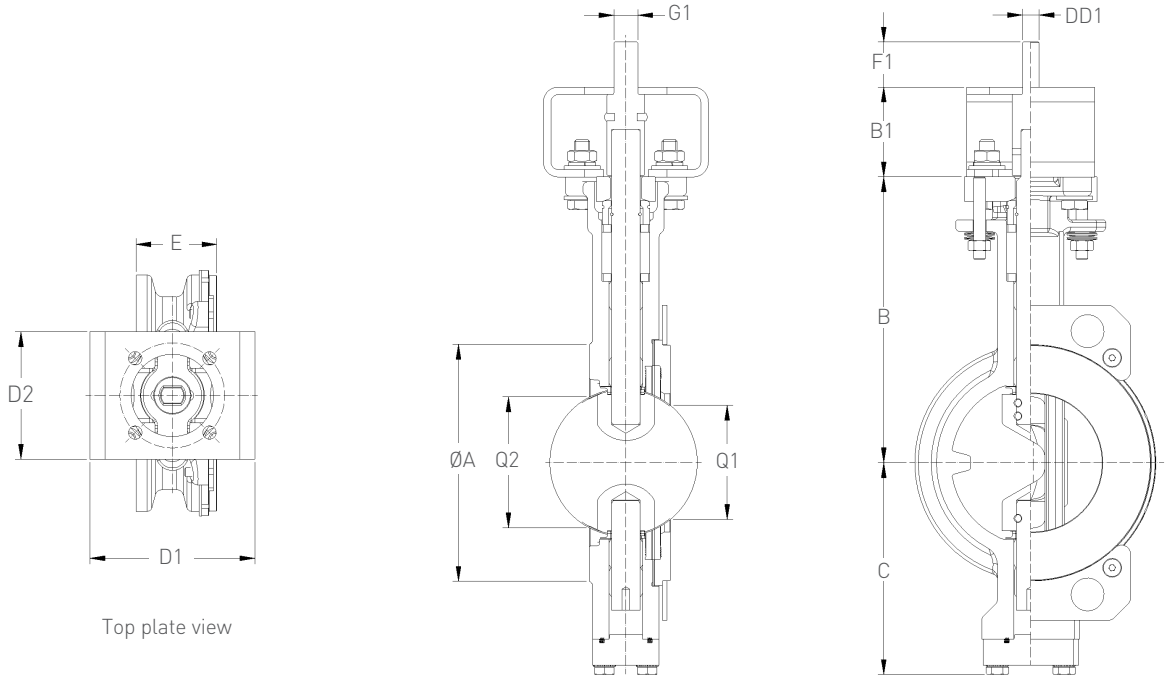

SERIES 37, PN 25/40, WAFER STYLE, DIMENSIONS mm

Size									Shaft Dimensions		Top Plate Data						Mass
DN	A	B	B1	C	E	F1	Q1	Q2	G1	DD1 or keyway	ISO flange type	PCD	No. holes	Hole dia.	D1	D2	kg
50	110	152	60	108	60	30	30	43	14	9.5	F07	70	4	9	110	85	6
65	105	152	60	121	46	30	51	54	14	9.5	F07	70	4	9	110	85	6
80	127	168	60	129	46	30	53	64	16	11	F07	70	4	9	110	85	7
100	157	191	60	141	52	30	82	90	20	14	F07	70	4	9	110	85	10
125	186	192	80	154	56	30	109	121	20	14	F10	102	4	11	130	100	14
150	216	222	80	186	56	50	135	140	25	18	F12	125	4	13.5	160	125	17
200	270	257	100	217	71	50	171	186	30	22	F12	125	4	13.5	160	125	31
250	324	289	100	257	76	70	228	236	35	10x8x50	F12	125	4	13.5	160	125	44
300	381	330	100	298	83	70	275	284	40	12x8x56	F14	140	4	17.5	210	160	64

SERIES 37, PN 40 / ASME CLASS 300, WAFER STYLE, MULTI-DRILLED VERSION DIMENSIONS mm

Size									Shaft Dimensions		Top Plate Data						Mass
DN	A	B	B1	C	E	F1	Q1	Q2	G1	DD1 or keyway	ISO flange type	PCD	No. holes	Hole dia.	D1	D2	kg
50 [1]	104	165	60	113	44	30	14	42	14	9.5	F07	70	4	9	110	85	6
65	105	152	60	121	46.4	30	51	54	14	9.5	F07	70	4	9	110	85	6
80	127	168	60	129	46.4	30	53	64	16	11	F07	70	4	9	110	85	7
100	157	191	60	141	52.4	30	82	90	20	14	F07	70	4	9	110	85	10
125	186	192	80	154	56	30	109	121	20	14	F10	102	4	11	130	100	14

NOTE

1. Dimensions are for the DN 50 with EN 558 Series 20 face-to-face.

DIMENSIONS - WAFER STYLE

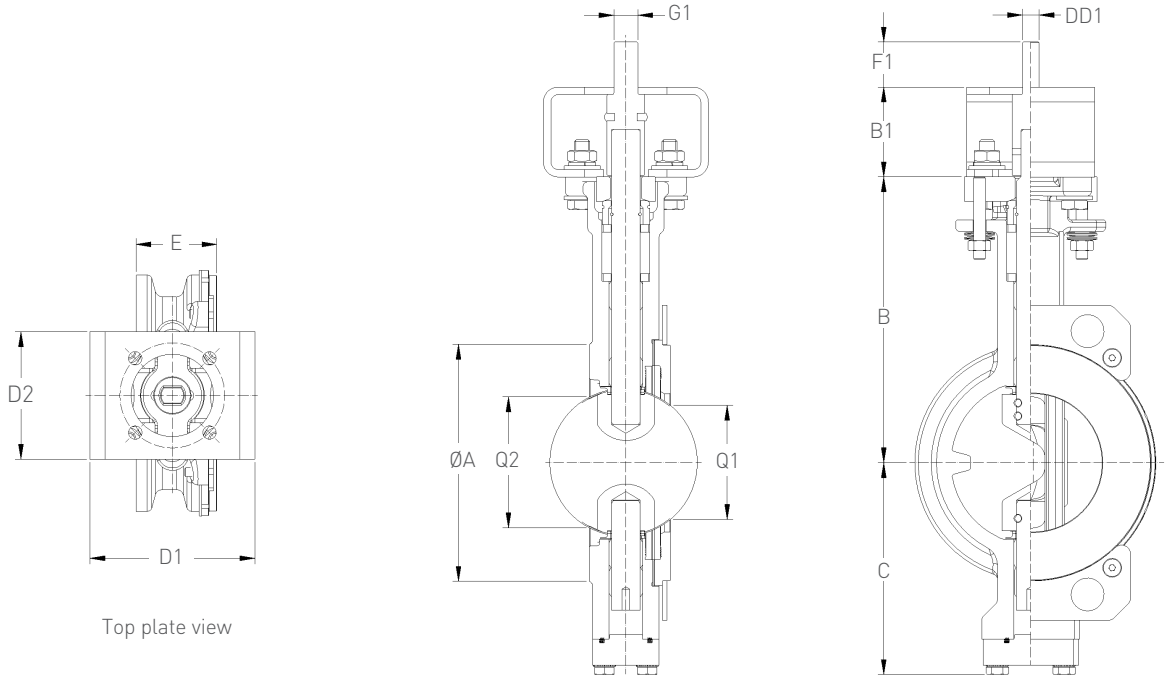

SERIES 36, ASME CLASS 150, WAFER STYLE, DIMENSIONS mm

Size									Shaft Dimensions		Top Plate Data						Mass
DN	A	B	B1	C	E	F1	Q1	Q2	G1	DD1 or keyway	ISO flange type	PCD	No. holes	Hole dia.	D1	D2	kg
50 [1]	104	165	60	113	44	30	14	42	12	8	F07	70	4	9	110	85	6
50	110	152	60	108	60	30	30	43	12	8	F07	70	4	9	110	85	6
65	105	152	60	121	48	30	51	54	12	8	F07	70	4	9	110	85	6
80	127	168	60	129	48	30	53	64	16	11	F07	70	4	9	110	85	7
100	157	191	60	141	54	30	82	90	16	11	F07	70	4	9	110	85	10
125	186	192	60	154	57	30	111	120	20	14	F07	70	4	9	110	85	13
150	216	222	80	186	57	50	135	140	25	18	F12	125	4	13.5	160	125	17
200	270	257	80	217	64	50	179	186	30	22	F12	125	4	13.5	160	125	26
250	324	289	100	257	71	50	231	236	30	22	F12	125	4	13.5	160	125	39
300	381	330	100	298	81	50	278	284	30	22	F12	125	4	13.5	200	160	61

SERIES 37, ASME CLASS 300, WAFER STYLE, DIMENSIONS mm

Size									Shaft Dimensions		Top Plate Data						Mass
DN	A	B	B1	C	E	F1	Q1	Q2	G1	DD1 or keyway	ISO flange type	PCD	No. holes	Hole dia.	D1	D2	kg
50 [1]	104	165	60	113	44	30	14	42	14	9.5	F07	70	4	9	110	85	6
50	110	152	60	108	60	30	30	43	14	9.5	F07	70	4	9	110	85	6
65	105	152	60	121	48	30	51	54	14	9.5	F07	70	4	9	110	85	6
80	127	168	60	129	48	30	53	64	16	11	F07	70	4	9	110	85	7
100	157	191	60	141	54	30	82	90	20	14	F07	70	4	9	110	85	10
125	186	192	80	154	59	30	109	119	20	14	F10	102	4	11	130	100	14
150	216	222	80	186	59	50	135	140	25	18	F12	125	4	13.5	160	125	17
200	270	257	100	217	73	50	171	186	30	22	F12	125	4	13.5	160	125	31
250	324	289	100	257	83	70	224	236	35	10x8x50	F12	125	4	13.5	160	125	44
300	381	330	100	298	92	70	269	284	40	12x8x56	F14	140	4	17.5	210	160	64

NOTE

1. Dimensions are for the DN 50 with EN 558 Series 20 face-to-face.

DIMENSIONS - LUG STYLE

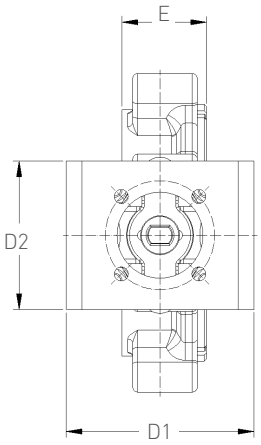

Top plate view

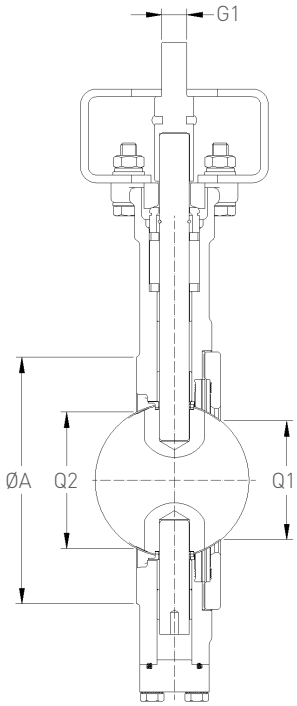

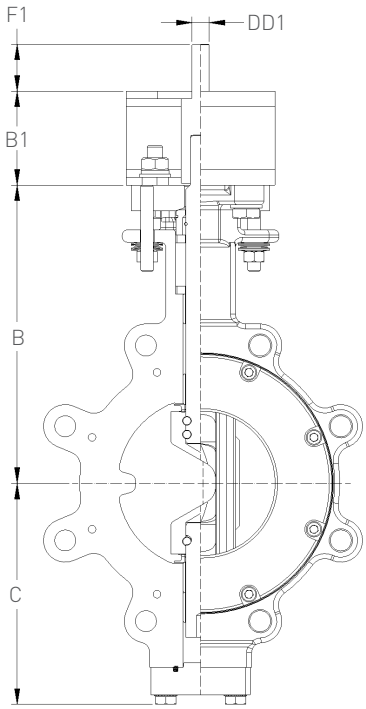

SERIES 36, PN 10/16, LUG STYLE, DIMENSIONS mm

Size									Shaft Dimensions		Top Plate Data						Mass
DN	A	B	B1	C	E	F1	Q1	Q2	G1	DD1 or keyway	ISO flange type	PCD	No. holes	Hole dia.	D1	D2	kg
50	113	152	60	108	60	30	30	43	12	8	F07	70	4	9	110	85	7
65	122	152	60	117	46	30	53	54	12	8	F07	70	4	9	110	85	9
80	135	168	60	125	46	30	56	62	16	11	F07	70	4	9	110	85	10
100	157	191	60	141	52	30	82	90	16	11	F07	70	4	9	110	85	12
125	186	192	60	154	56	30	111	120	20	14	F07	70	4	9	110	85	15
150	216	222	80	157	56	50	134	140	25	18	F12	125	4	13.5	160	125	21
200	267	257	80	217	60	50	181	187	30	22	F12	125	4	13.5	160	125	32
250	324	289	100	257	68	50	233	237	30	22	F12	125	4	13.5	160	125	45
300	381	330	100	282	78	50	278	284	30	22	F12	125	4	13.5	200	160	74

SERIES 36, PN 10/16/25, LUG STYLE, DIMENSIONS mm

Size									Shaft Dimensions		Top Plate Data						Mass
DN	A	B	B1	C	E	F1	Q1	Q2	G1	DD1 or keyway	ISO flange type	PCD	No. holes	Hole dia.	D1	D2	kg
50 [1]	104	165	60	113	44	30	14	42	12	8	F07	70	4	9	110	85	7

NOTE

1. Dimensions are for the DN 50 with EN 558 Series 20 face-to-face.

DIMENSIONS - LUG STYLE

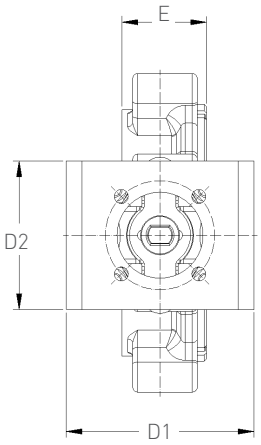

Top plate view

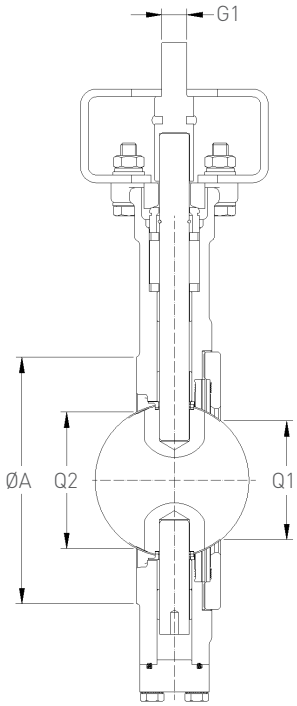

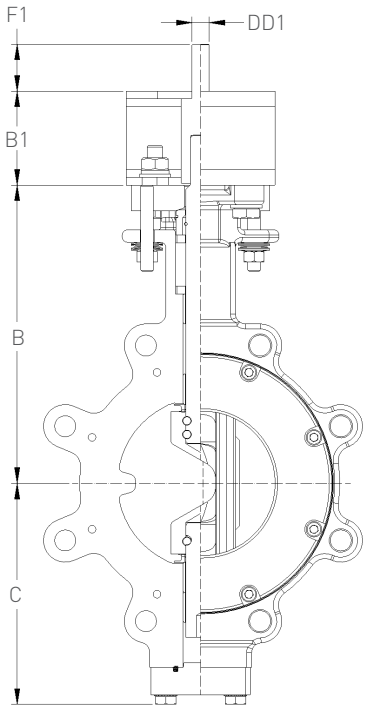

SERIES 37, PN 25/40, LUG STYLE, DIMENSIONS mm

Size									Shaft Dimensions		Top Plate Data						Mass
DN	A	B	B1	C	E	F1	Q1	Q2	G1	DD1 or keyway	ISO flange type	PCD	No. holes	Hole dia.	D1	D2	kg
50	113	152	60	108	60	30	30	43	14	9.5	F07	70	4	9	110	85	7
65	122	152	60	117	46	30	53	54	14	9.5	F07	70	4	9	110	85	9
80	135	168	60	125	46	30	56	62	16	11	F07	70	4	9	110	85	10
100	165	191	60	141	52	30	82	90	20	14	F07	70	4	9	110	85	13
125	186	192	80	154	56	30	109	121	20	14	F10	102	4	11	130	100	18
150	215	222	80	182	56	50	134	140	25	18	F12	125	4	13.5	160	125	23
200	275	257	100	217	71	50	171	186	30	22	F12	125	4	13.5	160	125	42
250	324	289	100	257	76	70	228	235	35	10x8x50	F12	125	4	13.5	160	125	60
300	381	330	100	295	83	70	275	284	40	12x8x56	F14	140	4	17.5	210	160	86

SERIES 37, PN 40, LUG STYLE, DIMENSIONS mm

Size									Shaft Dimensions		Top Plate Data						Mass
DN	A	B	B1	C	E	F1	Q1	Q2	G1	DD1 or keyway	ISO flange type	PCD	No. holes	Hole dia.	D1	D2	kg
50 [1]	104	165	60	113	44	30	14	42	14	9.5	F07	70	4	9	110	85	7

NOTE

1. Dimensions are for the DN 50 with EN 558 Series 20 face-to-face.

DIMENSIONS - LUG STYLE

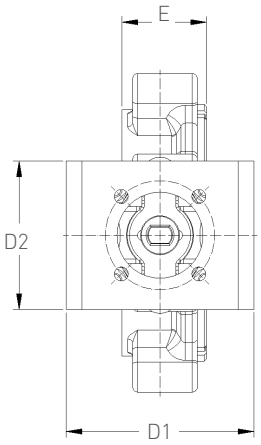

Top plate view

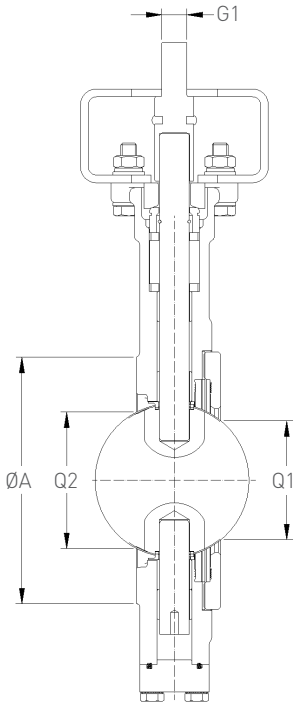

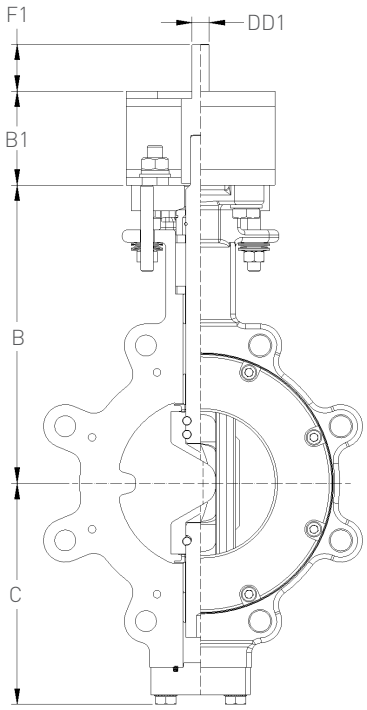

SERIES 36, ASME CLASS 150, LUG STYLE, DIMENSIONS mm

Size									Shaft Dimensions		Top Plate Data						Mass
DN	A	B	B1	C	E	F1	Q1	Q2	G1	DD1 or keyway	ISO flange type	PCD	No. holes	Hole dia.	D1	D2	kg
50 [1]	104	165	60	113	44	30	14	42	12	8	F07	70	4	9	110	85	7
50	113	152	60	108	60	30	30	43	12	8	F07	70	4	9	110	85	7
65	121	152	60	117	48	30	46	59	12	8	F07	70	4	9	110	85	9
80	134	168	60	133	48	30	48	67	16	11	F07	70	4	9	110	85	10
100	164	191	60	141	54	30	82	90	16	11	F07	70	4	9	110	85	12
125	193	192	60	154	57	30	111	120	20	14	F07	70	4	9	110	85	15
150	225	222	80	157	57	50	134	140	25	18	F12	125	4	13.5	160	125	21
200	270	257	80	217	64	50	179	186	30	22	F12	125	4	13.5	160	125	32
250	324	289	100	257	71	50	233	236	30	22	F12	125	4	13.5	160	125	45
300	381	330	100	282	81	50	278	284	30	22	F12	125	4	13.5	200	160	74

SERIES 37, ASME CLASS 300, LUG STYLE, DIMENSIONS mm

									Shaft Dimensions		Top Plate Data						Mass
Size DN	A	B	B1	C	E	F1	Q1	Q2	G1	DD1 or keyway	ISO flange type	PCD	No. holes	Hole dia.	D1	D2	kg
50 [1]	104	165	60	113	44	30	14	42	14	9.5	F07	70	4	9	110	85	7
50	113	152	60	108	60	30	30	43	14	9.5	F07	70	4	9	110	85	7
65	122	152	60	117	48	30	53	54	14	9.5	F07	70	4	9	110	85	9
80	135	168	60	125	48	30	56	62	16	11	F07	70	4	9	110	85	10
100	165	191	60	141	54	30	82	90	20	14	F07	70	4	9	110	85	13
125	194	192	80	154	59	30	109	120	20	14	F10	102	4	11	130	100	18
150	226	222	80	182	59	50	133	142	25	18	F12	125	4	13.5	160	125	23
200	283	257	100	217	73	50	171	186	30	22	F12	125	4	13.5	160	125	42
250	324	289	100	257	83	70	224	236	35	10x8x50	F12	125	4	13.5	160	125	60
300	381	330	100	295	92	70	269	284	40	12x8x56	F14	140	4	17.5	210	160	86

NOTE

1. Dimensions are for the DN 50 with EN 558 Series 20 face-to-face.

DIMENSIONS - WAFER STYLE WITH HANDLE

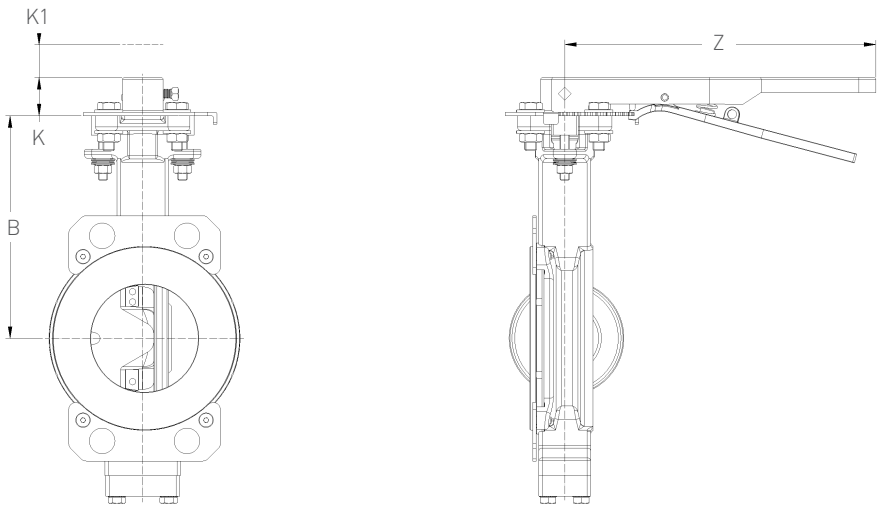

DIMENSIONS mm - SERIES 36, PN 10/16, ASME 150 WAFER STYLE WITH HANDLE

Size DN	Actuation Code	B	K	K1	Z	Mass (valve + handle) kg
50	BAB	152	38	38	267	5.7
65	BAB	152	38	38	267	5.5
80	BAC	168	38	38	267	6.5
100	BAD	191	38	38	267	9.5
125	BAD	192	38	38	267	11.7
150	CAD	222	38	38	356	16.2

DIMENSIONS mm - SERIES 36, PN 10/16/25, ASME 150 WAFER STYLE MULTI-DRILLED VERSION WITH HANDLE

Size DN	Actuation Code	B	K	K1	Z	Mass (valve + handle) kg
50 [1]	BAB	165	38	38	267	5.7
65	BAB	152	38	38	267	5.5
80	BAC	168	38	38	267	6.5
100	BAD	191	38	38	267	9.5
125	BAD	192	38	38	267	11.7

DIMENSIONS mm - SERIES 37, PN 25/40, ASME 300 WAFER STYLE WITH HANDLE

Size DN	K-LOK Top plate code	B	K	K1	Z	Mass (valve + handle) kg
50	BAB	152	38	38	267	5.7
65	BAB	152	38	38	267	5.5
80	BAC	168	38	38	267	6.5
100	BAD	191	38	38	267	9.5
125	BAD	192	38	38	267	12.0
150	CAD	222	38	38	356	16.2

DIMENSIONS mm - SERIES 37, PN 40, ASME 300 WAFER STYLE MULTI-DRILLED VERSION WITH HANDLE

Size DN	K-LOK Top plate code	B	K	K1	Z	Mass (valve + handle) kg
50 [1]	BAB	165	38	38	267	5.7
65	BAB	152	38	38	267	5.5
80	BAC	168	38	38	267	6.5
100	BAD	191	38	38	267	9.5
125	BAD	192	38	38	267	12.0

NOTES

1. Dimensions are for the DN 50 with EN 558 Series 20 face-to-face.
2. Refer to individual drawing for further details of valve and handle.
3. Minimum clearance required for removal of handle.
4. Handles are not recommended on valve larger than DN 100. If used on valves larger than DN 100, pressure should be 10 bar or less.

DIMENSIONS - LUG STYLE WITH HANDLE

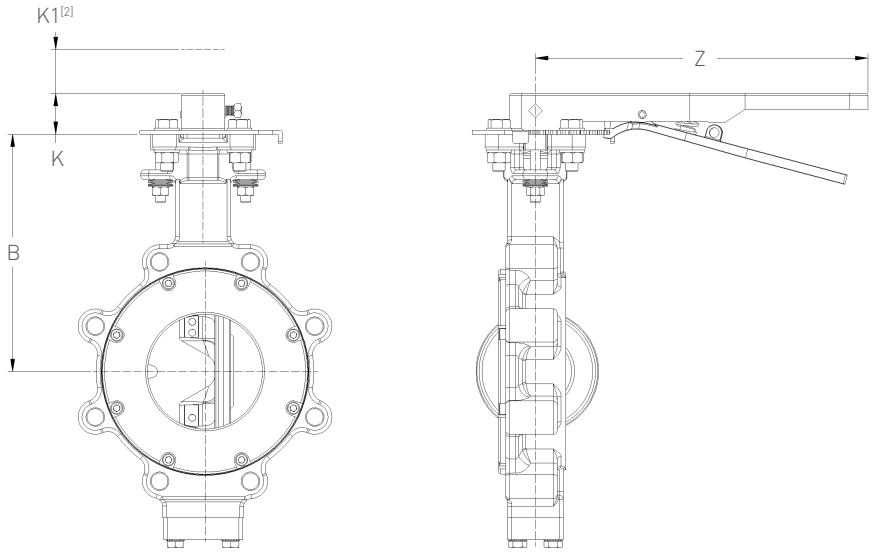

DIMENSIONS mm - SERIES 36, PN 10/16, ASME 150 LUG STYLE WITH HANDLE

Size DN	Actuation Code	B	K	K1	Z	Mass (valve + handle) kg
50	BAB	152	38	38	267	6.5
65	BAB	152	38	38	267	6.7
80	BAC	168	38	38	267	7.8
100	BAD	191	38	38	267	11.8
125	BAD	192	38	38	267	14.8
150	CAD	222	38	38	356	20.0

DIMENSIONS mm - SERIES 36, PN 10/16/25, ASME 150 LUG STYLE WITH HANDLE

Size DN	Actuation Code	B	K	K1	Z	Mass (valve + handle) kg
50 [1]	BAB	165	38	38	267	6.7

DIMENSIONS mm - SERIES 37, PN 25/40, ASME 300 LUG STYLE WITH HANDLE

Size DN	K-LOK Top plate code	B	K	K1	Z	Mass (valve + handle) kg
50	BAB	152	38	38	267	7.0
65	BAB	152	38	38	267	8.5
80	BAC	168	38	38	267	9.5
100	BAD	191	38	38	267	12.5
125	BAD	192	38	38	267	16.7
150	CAD	222	38	38	356	22.1

DIMENSIONS mm - SERIES 37, PN 40, ASME 300 LUG STYLE WITH HANDLE

Size DN	K-LOK Top plate code	B	K	K1	Z	Mass (valve + handle) kg
50 [1]	BAB	165	38	38	267	7.0

NOTES

1. Dimensions are for the DN 50 with EN 558 Series 20 face-to-face.
2. Refer to individual drawing for further details of valve and handle.
3. Minimum clearance required for removal of handle.
4. Handles are not recommended on valve larger than DN 100. If used on valves larger than DN 100, pressure should be 10 bar or less.

RECOMMENDED FLANGE BOLT LENGTHS

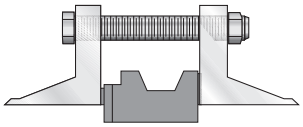
Type 1

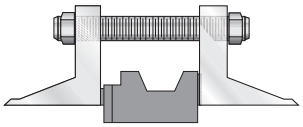
Type 2

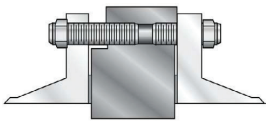
Type 3

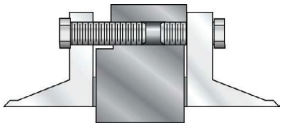
Type 4

SERIES 36 mm

WAFER STYLE

Size DN	Flange drilling	Qty	Bolt size	Bolt type 1 [2]	Stud type 2 [3]
50 [1]	PN 10/16/20/25	4	M16	110	130
50	PN 10/16	4	M16	125	145
65	PN 10/16/20	4	M16	120	140
	PN 25	8	M16	120	140
80	PN10/16/25	8	M16	125	145
	PN 20	4	M16	125	145
100	PN 10/16/20	8	M16	135	160
	PN 25	8	M20	135	160
125	PN 10/16	8	M16	130	150
	PN 20	8	M20	145	175
	PN 25	8	M24	145	175
150	PN 10/16	8	M20	135	160
200	PN 10	8	M20	150	170
250	PN 10	12	M20	165	180
300	PN 10	12	M20	170	195
200	PN 16	12	M20	150	170
250	PN 16	12	M24	165	180
300	PN 16	12	M24	170	195

LUG STYLE

Size DN	Flange drilling	Qty	Bolt size	Stud type 3	Bolt type 4 Seat side	Bolt type 4 Disc side
50 [1]	PN 10/16	8 (4+4)	M16	70	43	41
	PN 25	8 (4+4)	M16	70	45	43
50	PN 10/16	8	M16	70	50	
65	PN 10/16	16	M16	60	40	
80	PN 10/16	16	M16	70	45	
100	PN 10/16	16	M16	70	45	
125	PN 10/16	16	M16	70	50	
150	PN 10/16	16	M20	75	50	
200	PN 10	16	M20	80	55	
250	PN 10	24	M20	85	60	
300	PN 10	24	M20	90	65	
200	PN 16	24	M20	80	55	
250	PN 16	24	M24	95	60	
300	PN 16	24	M24	100	65	

SERIES 37 mm

WAFER STYLE

Size DN	Flange drilling	Qty	Bolt size	Bolt type 1 [2]	Stud type 2 [3]
50 [1]	PN 40	4	M16	115	135
50	PN 25/40	4	M16	130	150
65	PN 40	8	M16	120	140
80	PN 40	8	M16	125	145
100	PN 40	8	M20	135	160
125	PN 40	8	M24	145	175
150	PN 25/40	8	M24	150	180
200	PN 25	12	M24	180	215
250	PN 25	12	M27	195	230
300	PN 25	16	M27	210	245
200	PN 40	12	M27	180	215
250	PN 40	12	M30	195	230
300	PN 40	16	M30	210	245

LUG STYLE

Size DN	Flange drilling	Qty	Bolt size	Stud type 3	Bolt type 4 Seat side	Bolt type 4 Disc side
50 [1]	PN 40	8 (4+4)	M16	70	45	43
50	PN 25/40	8	M16	70	50	
65	PN 25/40	16	M16	65	45	
80	PN 25/40	16	M16	65	45	
100	PN 25/40	16	M20	78	50	
125	PN 25/40	16	M24	90	55	
150	PN 25/40	16	M24	100	55	
200	PN 25	24	M24	104	65	
250	PN 25	24	M27	110	70	
300	PN 25	32	M27	115	70	
200	PN 40	24	M27	115	70	
250	PN 40	24	M30	120	70	
300	PN 40	32	M30	120	80	

NOTES

1. Dimensions are for the DN 50 with EN 558 Series 20 face-to-face.
2. Flange bolt (Hex head)
3. Threaded rod (all thread)
4. Bolt lengths have been calculated based on the use of nuts, no washers, and 1/8" thick flange gasket.

RECOMMENDED FLANGE BOLT LENGTHS

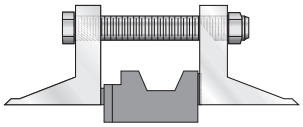
Type 1

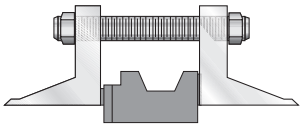
Type 2

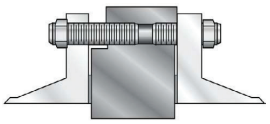
Type 3

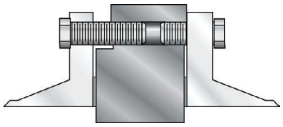
Type 4

SERIES 36 mm

WAFER STYLE

Size DN	Qty	Bolt type 1 [2]	Stud type 2 [3]
50 [1]	4	5/8 - 11UNC x 115	5/8 - 11UNC x 135
50	4	5/8 - 11UNC x 135	5/8 - 11UNC x 160
65	4	5/8 - 11UNC x 130	5/8 - 11UNC x 155
80	4	5/8 - 11UNC x 135	5/8 - 11UNC x 155
100	8	5/8 - 11UNC x 140	5/8 - 11UNC x 160
125	8	3/4 - 10UNC x 145	3/4 - 10UNC x 175
150	8	3/4 - 10UNC x 150	3/4 - 10UNC x 180
200	8	3/4 - 10UNC x 165	3/4 - 10UNC x 190
250	12	7/8 - 9UNC x 180	7/8 - 9UNC x 210
300	12	7/8 - 9UNC x 190	7/8 - 9UNC x 220

LUG STYLE

				Bolt type 4	
Size DN	Qty	Bolt size	Stud type 3	Seat side	Disc side
50 [1]	8 (4+4)	5/8 - 11UNC	70	45	43
50	8	5/8 - 11UNC	73	51	
65	8	5/8 - 11UNC	67	44	
80	8	5/8 - 11UNC	67	44	
100	16	5/8 - 11UNC	70	51	
125	16	3/4 - 10UNC	76	51	
150	16 (8+8)	3/4 - 10UNC	83	57	51
200	16	3/4 - 10UNC	86	57	
250	24	7/8 - 9UNC	92	64	
300	24	7/8 - 9UNC	98	70	

SERIES 37 mm

WAFER STYLE

Size DN	Qty	Bolt type 1 [2]	Stud type 2 [3]
50 [1]	8	5/8 - 11UNC x 120	5/8 - 11UNC x 140
50	8	5/8 - 11UNC x 140	5/8 - 11UNC x 165
65	8	3/4 - 10UNC x 140	3/4 - 10UNC x 165
80	8	3/4 - 10UNC x 145	3/4 - 10UNC x 170
100	8	3/4 - 11UNC x 155	3/4 - 11UNC x 180
125	8	3/4 - 11UNC x 160	3/4 - 11UNC x 185
150	12	3/4 - 11UNC x 165	3/4 - 11UNC x 195
200	12	7/8 - 10UNC x 200	7/8 - 10UNC x 230
250	12	1 - 8UNC x 220	1 - 8UNC x 255
	8	1 - 8UNC x 85	1 - 8UNC x 121
300	16	1 1/8 - 8UN x 240	1 1/8 - 8UN x 275

LUG STYLE

				Bolt type 4	
Size DN	Qty	Bolt size	Stud type 3	Seat side	Disc side
50 [1]	16 (8+8)	5/8 - 11UNC	70	48	46
50	16	5/8 - 11UNC	73	51	
65	16	3/4 - 10UNC	76	51	
80	16	3/4 - 10UNC	76	51	
100	16	3/4 - 10UNC	83	57	
125	16	3/4 - 10UNC	90	64	
150	24	3/4 - 10UNC	92	64	
200	24	7/8 - 9UNC	105	76	
250	32	1 - 8UNC	121	89	
300	32	1 1/8 - 8UN	130	95	

NOTES

1. Dimensions are for the DN 50 with EN 558 Series 20 face-to-face.
2. Flange bolt (Hex head)
3. Threaded rod (all thread)
4. Bolt lengths have been calculated based on the use of nuts, no washers, and 1/8" thick flange gasket.

VACUUM RATING

The combination of interference fit seats and bi-directional packing makes the K-LOK® especially well suited for vacuum service.
Standard K-LOK® high performance valves are rated to an absolute pressure of 1.354 x 10^{-3} mbar / 1.016 x 10^{-3} mm Hg. Higher vacuum applications are available.

FLOWRATE COEFFICIENTS

K_V VALUES VS. TRAVEL POSITION

	Angle of opening									
									Series 36	Series 37
Size DN	10°	20°	30°	40°	50°	60°	70°	80°	90°	90°
50 [1]	2	3	10	21	33	45	52	56	58	58
50	5	9	16	29	44	67	91	116	141	138
65	5	9	16	29	46	69	96	128	151	147
80	7	10	21	37	58	86	120	160	190	185
100	14	20	38	69	112	167	232	310	366	356
125	26	38	72	128	209	315	434	580	685	677
150	43	60	112	198	319	474	655	871	1030	983
200	72	101	216	377	599	907	1290	1725	2103	1983
250	124	174	391	650	1021	1570	2251	3052	3913	3735
300	179	262	584	906	1401	2384	3308	4590	5961	5689

NOTES

K_V is the volume of water in m^3/h that will pass through a valve with a pressure drop of 1 bar at 20°C.

1. K_V's are for the DN 50 with EN 558 Series 20 face-to-face.

SEATING AND UNSEATING TORQUE

Seating and unseating torques are a function of the size of the valve and the shutoff pressure of the system.
Specific torque ratings can be found in the seating/un-seating chart at the intersection of the "size" row and the "shutoff pressure" column.
Torques listed are for PTFE and RTFE seated valves. For different seat materials, specific multipliers are to be used as stated.
All torques listed are for normal service conditions (i.e. operating frequency is a minimum of once per month; disc corrosion is expected to be mild or minor, the media is a clean gas, liquid or steam and is non-abrasive) and chemical effects upon the seat are minor.

PTFE AND RTFE BI-DIRECTIONAL SEATING AND UNSEATING TORQUE VALUES

	Seating and unseating torque N·m						
	System shutoff pressure bar						
Size DN	**10**	**14**	**20**	**28**	**35**	**40**	**50**
50	25	32	43	52	59	61	66
65	25	32	43	52	59	61	66
80	28	36	49	59	67	69	73
100	54	68	93	112	127	131	140
125	105	127	153	177	198	204	215
150	155	181	209	243	270	289	328
200	233	263	362	454	550	600	759
250	377	412	531	706	842	937	1113
300	519	593	723	922	1095	1217	1462

NOTES

1. Torques shown are based on noncorrosive or non-abrasive services such as water.
2. For corrosive, abrasive or other services than water, multiply by the following factor:

High solids slurry:	x 1.5
Dry gas:	x 2.0
Dry powders:	x 2.7
Liquids other than water:	x 1.2
Lubricating fluids:	x 0.8

For services that combine unfriendly conditions such as extreme temperatures and high solids, or corrosive with high temperatures, contact your sales representative.

PRESSURE/TEMPERATURE RATINGS FOR BODIES, DISCS AND SEATS

	Temperature °C										
Pressure bar	**-40 [1]**	**-29**	**-18**	**38**	**82**	**93**	**121**	**149**	**204**	**232**	**260**
ASME Class 150 Body (Series 36)											
Carbon Steel	N/A	19.6	19.6	19.6	18.2	17.9	16.9	15.8	13.7	12.7	11.7
Stainless Steel	19	19	19	19	17	16.5	15.6	14.8	13.6	12.7	11.7
PN 25 Multi-drilled Body (Series 36)											
Carbon Steel	N/A	25	25	25	24	23.6	22.9	22.2	20.1	19.8	18.8
Stainless Steel	25	25	25	25	24.2	23.9	22.8	21.4	18.8	18	17.2
ASME Class 300 Body (Series 37)											
Carbon Steel	N/A	51.1	51.1	51.1	47.9	47.1	46	45.1	44.8	43.1	41.5
Stainless Steel	49.6	49.6	49.6	49.6	44.3	43	40.4	38.1	35.5	34.2	33
ASME Class 150 Disc											
Stainless Steel	19	19	19	19	17	16.5	15.6	14.8	13.6	12.7	11.7
Super Duplex CE3MN	N/A	19	19	19	17	16.5	15.6	14.8	13.6	12.7	11.7
PN 25 Multi-drilled Disc											
Stainless Steel	25	25	25	25	24.2	23.9	22.8	21.4	18.8	18	17.2
Super Duplex CE3MN	N/A	25	25	25	24.2	23.9	22.8	21.4	18.8	18	17.2
ASME Class 300 Disc											
Stainless Steel	49.6	49.6	49.6	49.6	44.3	43	40.4	38.1	35.5	34.2	33
Super Duplex CE3MN	N/A	49.6	49.6	49.6	44.3	43	40.4	38.1	35.5	34.2	33
K-LOK Seats											
Teflon (TFE)	51.1	51.1	51.1	51.1	41.1	39	31	22.4	3.4	N/A	N/A
Reinforce TFE (RTFE)	51.1	51.1	51.1	51.1	48.3	46.9	37.9	31	15.5	6.9	3.4

NOTES

1. -29°C is the limit for the scope of ASME B16.34.
2. -29 to 200°C is the limit for ISO 15848-1 certification of the valve, higher temperatures are shown for informational purposes of material limitations.

PRESSURE/TEMPERATURE RATINGS FOR SEAT MATERIALS

POLYMER SEATS

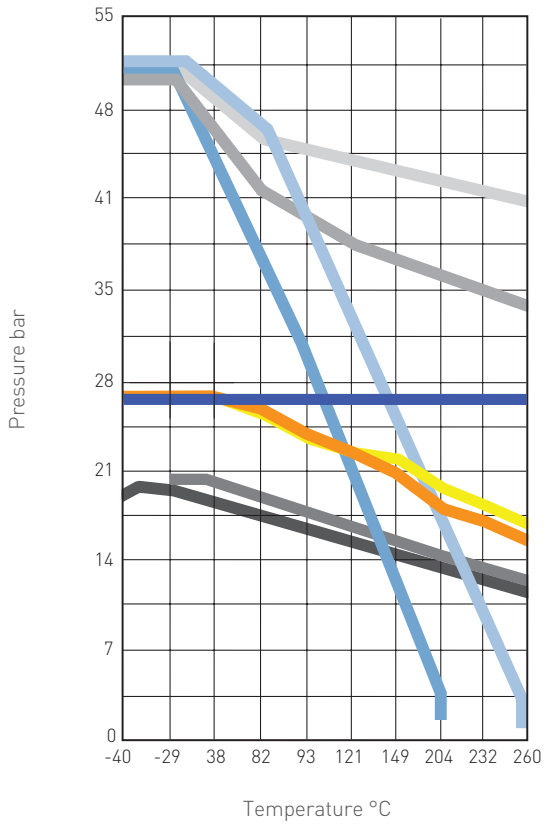

Legend:

- RTFE seat
- PTFE seat
- Carbon steel ASME 150
- 316 Stainless steel ASME 150
- Carbon steel ASME 300
- 316 Stainless steel ASME 300
- Carbon steel PN 25 Multi-drilled Body (Series 36)
- Super Duplex CE3MN PN 25 Multi-drilled Disc
- Stainless steel PN 25 Multi-drilled Body/Disc (Series 36)

SELECTION GUIDE

Example:	36	0100	W0	PB	00	A1	CQ	SQ0	KB	R1	PG	SA	I	B	FE1 PED

Series

36	K-LOK® Series 36
37	K-LOK® Series 37

Size

0050	DN 50	**0150**	DN 150
0065	DN 65	**0200**	DN 200
0080	DN 80	**0250**	DN 250
0100	DN 100	**0300**	DN 300
0125	DN 125		

Body style

W0	Wafer
L0	Lug [1]

Flange drilling

A1	ASME 150	**P5**	PN 25	**PR**	PN 10/16/25
A2	ASME 300	**P6**	PN 40	**MX**	PN 10/16/20/25, ASME 150, AS2129 Tbl E, JIS 10
P2	PN 10	**PB**	PN 10/16	**MQ**	PN 40, ASME 300
P3	PN 16	**PG**	PN 25/40	**MI**	PN 10/16/20/25, ASME 150
P4	PN 20 (ASME 150 Metric)				

Face-to-face

00	Standard	**20** [2]	EN558 Series 20

Pressure rating

A1	ASME 150	**A2**	ASME 300	**25**	PN 25

Body material

CQ	CS ASTM A216 WCB/EN 1.0619
SQ	316SS ASTM A351 CF8M/EN 1.4408

Disc material

SQ0	316SS ASTM A351 CF8M/EN 1.4408
V00 [3]	Super Duplex ASTM A995 Gr. CE3MN

Shaft material

KB	17-4PH Stainless Steel

Seat/backing ring

R1	RTFE/SS	**TB**	PTFE/SS

Packing and gaskets

PG	PTFE, Graphite

Bearings

SA	316SS/TFE/BRZ
ST	316SS/TFE

Actuator mounting

I	ISO Mount

Actuation

B	Bare Valve

Special code

FE1	Fugitive emissions EN 15848 certified	**PED**	PED/CE

NOTES

1. All lug valves have bolted seat retaining rings for full rated bi-directional dead end service.
2. DN 50 EN 558 Series 20 face-to-face only.
3. Standard on DN 50 with EN 558 Series 20 face-to-face only.

FLANGE DRILLING CODES

	Series 36 Wafer						Series 37 Wafer				
Size DN	A150, PN10/16/20/25, AS 2129 Table E, JIS 10K (25 bar rated)	A150, PN 10/16/20/25 (25 bar rated)	PN 10	PN 16	PN 10/16/25 (25 bar rated)	A150	A300, PN 40	PN 25/40	A300	PN 25	PN 40
50 [1]	MX	-	-	-	-	-	MQ	-	-	-	-
50	-	-	PB	PB	-	A1	-	PG	A2	-	-
65	-	MI	PB	PB	-	A1	MQ	PG	A2	-	-
80	-	MI	PB	PB	-	A1	MQ	PG	A2	-	-
100	-	MI	PB	PB	-	A1	MQ	PG	A2	-	-
125	-	MI	PB	PB	-	A1	MQ	PG	A2	-	-
150	-	-	PB	PB	-	A1	-	PG	A2	-	-
200	-	-	P2	P3	-	A1	-	-	A2	P5	P6
250	-	-	P2	P3	-	A1	-	-	A2	P5	P6
300	-	-	P2	P3	-	A1	-	-	A2	P5	P6

FLANGE DRILLING CODES

	Series 36 Lug						Series 37 Lug				
Size DN	A150, PN10/16/20/25, AS 2129 Table E, JIS 10K (25 bar rated)	A150, PN 10/16/20/25 (25 bar rated)	PN 10	PN 16	PN 10/16/25 (25 bar rated)	A150	A300, PN 40	PN 25/40	A300	PN 25	PN 40
50 [1]	-	-	-	-	PR	A1	-	-	A2	-	P6
50	-	-	PB	PB	-	A1	-	PG	A2	-	-
65	-	-	PB	PB	-	A1	-	PG	A2	-	-
80	-	-	PB	PB	-	A1	-	PG	A2	-	-
100	-	-	PB	PB	-	A1	-	PG	A2	-	-
125	-	-	PB	PB	-	A1	-	PG	A2	-	-
150	-	-	PB	PB	-	A1	-	PG	A2	-	-
200	-	-	P2	P3	-	A1	-	-	A2	P5	P6
250	-	-	P2	P3	-	A1	-	-	A2	P5	P6
300	-	-	P2	P3	-	A1	-	-	A2	P5	P6

NOTE

1. EN 558 Series 20 FTF

VCTDS-00743-EN © 2011, 2026 Emerson. All rights reserved 09/26. The Emerson logo is a trademark and service mark of Emerson Electric Co. Keystone is a mark of an entity in the Emerson family of businesses. All other marks are the property of their respective owners.

Neither Emerson nor any of its affiliated entities assume responsibility for the selection, use or maintenance of any product. Responsibility for proper selection, use, and maintenance of any product remains solely with the purchaser and end user.

The contents of this publication are presented for informational purposes only, and while every effort has been made to ensure their accuracy, they are not to be construed as warranties or guarantees, express or implied, regarding the products or services described herein or their use or applicability. All sales are governed by our terms and conditions, which are available upon request. We reserve the right to modify or improve the designs or specifications of such products at any time without notice.

Emerson.com